CAÑO DE ESCAPE

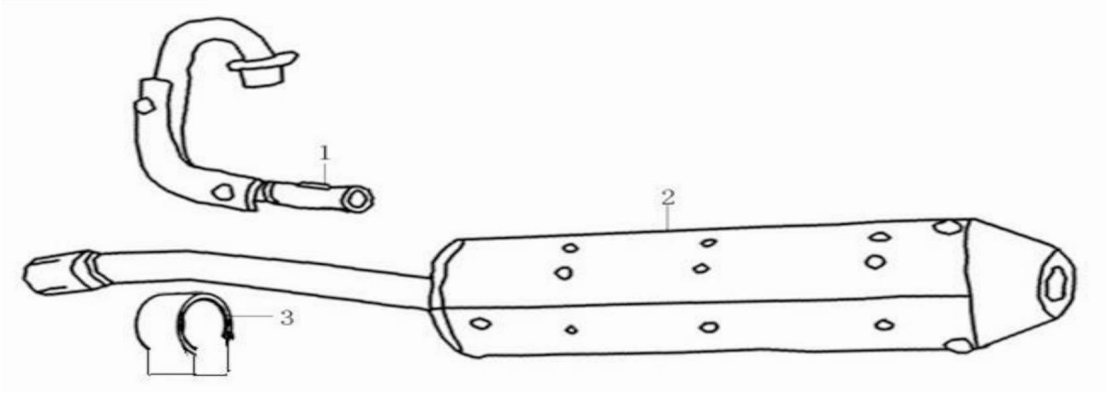

Rating: Not Rated Yet
Price:
Variant price modifier:

Base price with tax:

Price with discount:

Salesprice with discount:

Sales price:

Sales price without tax:

Discount:

Tax amount:

Ask a question about this product

Description

Ref.	Título	Código
1	CAÑO DE ESCAPE	1-117200
2		1-117300
3		1-117500