CARTER

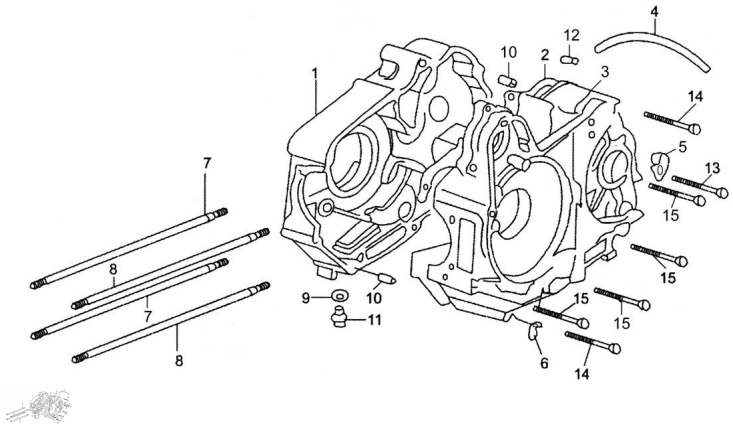

Rating: Not Rated Yet
Price:
Variant price modifier:

Base price with tax:

Price with discount:

Salesprice with discount:

Sales price:

Sales price without tax:

Discount:

Tax amount:

Ask a question about this product

Description

Ref.	Título	Código
1	BLOQUE SEMICARTER DERECHO	27-11110
2	JUNTA SEMICARTER	27-11119
3	BLOQUE SEMICARTER IZQUIERDO	27-11210
4	TUBO SALIDA DE AIRE	250301420
5	ABRAZADERA TUBO SALIDA DE AIRE Nº2	27-20154
6	ABRAZADERA	27-11217
7	ESPARRAGO CILINDRO A	27-12342
8	ESPARRAGO CILINDRO B	27-12343
9	ARANDELA DRENAJE ACEITE	27-11213
10	CONJUNTO PERNO 10 X 14	27-11118
11	TORNILLO DRENAJE M12 X 1.5	27-11212
12	ABRAZADERA	27-20153
13	TORNILLO M6 X 50	250301460

Ref.	Título	Código
14	TORNILLO M6 X 60	250301465
15	TORNILLO M6 X 65	250301380