CIGÜEÑAL

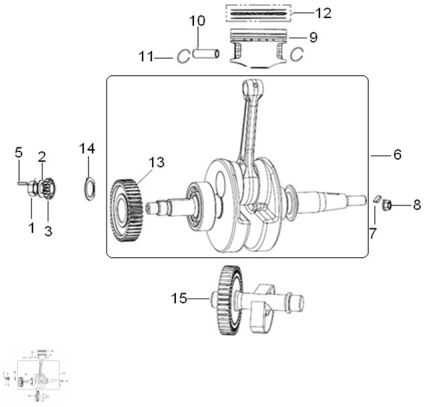

Rating: Not Rated Yet
Price:
Variant price modifier:

Base price with tax:

Price with discount:

Salesprice with discount:

Sales price:

Sales price without tax:

Discount:

Tax amount:

Ask a question about this product

Description

Ref.	Título	Código
1	Tuerca M16 × 1,5	
2	Arandelas	
3	Engranaje impulsor bomba de aceite	
5	Seguro 4x20	
6	CIGÜEÑAL Y BIELA ??	

Ref.	Título	Código	
	7	chaveta	
	8	TUERCA	
	9	PISTON	
	10	PERNO DE PISTON	
	11	SEEGER 014	
	12	JUEGO DE AROS	
	13		
	14	arandela de ajuste	
	15		