CILINDRO

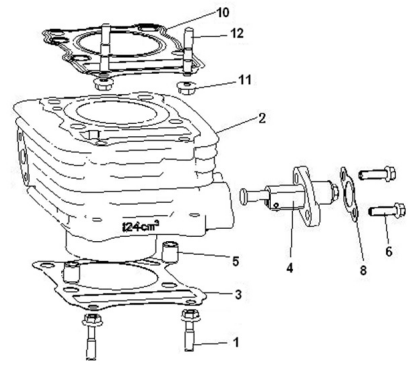

Rating: Not Rated Yet
Price:
Variant price modifier:

Base price with tax:

Price with discount:

Salesprice with discount:

Sales price:

Sales price without tax:

Discount:

Tax amount:

Ask a question about this product

Description

Ref.	Título	Código
1	Tornillo	
2	CILINDRO	
3	JUNTA, CILINDRO	
4	TENSOR	

5	Pin de posi	
6	Tornillo	
8	Junta	
10	JUNTA DE TAPA	
11	TUERCA 6MM	
12		