CONJUNTO BATERIA

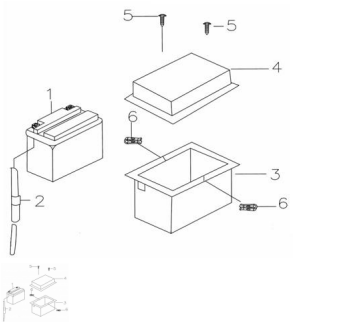

Rating: Not Rated Yet
Price:
Variant price modifier:

Base price with tax:

Price with discount:

Salesprice with discount:

Sales price:

Sales price without tax:

Discount:

Tax amount:

Ask a question about this product

Description

Ref.	Título	Código
1	BATERIA YB6.5L-B	0-10035
2	TUBO DE DESCARGA	25-31534-FYBT-0
3	CAJA BATERIA	25-31512-FYG10C
4	TAPA CAJA BATERIA	25-31511-FYG10C
5	TORNILLO ST4,8 X 16	25-GB845-85-480
6	TUERCA FLOTANTE	25-90210-48000-