EMBRAGUE

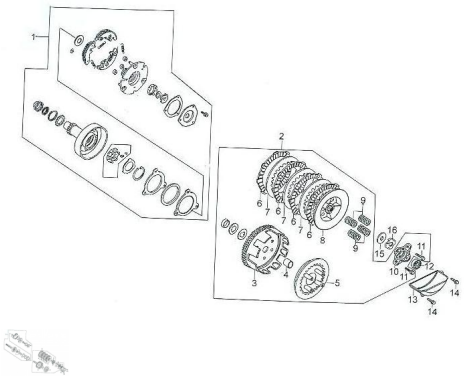

Rating: Not Rated Yet
Price:
Variant price modifier:

Base price with tax:

Price with discount:

Salesprice with discount:

Sales price:

Sales price without tax:

Discount:

Tax amount:

Ask a question about this product

Description

Ref.	Título	Código
1	CONJUNTO EMBRAGUE PRIMARIO	89-22500-HZ31
2	CONJUNTO EMBRAGUE	89-22100-HZ31
3	PLATO EMBRAGUE MOTOR	89-22110-HZ31
4	ARO DE FIJACIÓN	89-22103-G011
5	DISCO CONDUCTOR	89-22102-G011
6	DISCO ROZAMIENTO	89-2213A-G011
7	PLATO, MOTOR	89-22201-HZ31
8	PLATO DE PRESIÓN	89-22224-G011
9	RESORTE	89-22224-I096
10	DISCO FINAL DE EMBRAGUE	89-22121-G011
11	TORNILLO M6X22	89-B16674
12	TORNILLO M6X16	89-B057830006
13	RODAMIENTO 6001	89-92102-00
14	RETEN	89-2211B-G011
15	ARANDELA	89-22111-G011
16	TUERCA	89-22112-G011