# GRUPO CADENA DE DISTRIBUCION

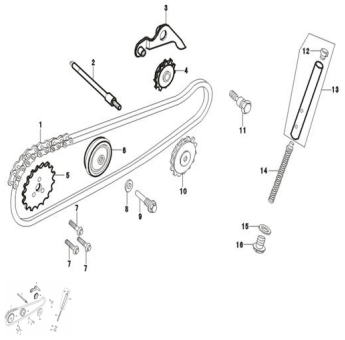

Rating: Not Rated Yet
**Price:**
Variant price modifier:

Base price with tax:

Price with discount:

Salesprice with discount:

Sales price:

Sales price without tax:

Discount:

Tax amount:

Ask a question about this product

Description

| Ref. | Título | Código |
|---|---|---|
| 1 | CADENA DE DISTRIBUCION | 170-14061 |
| 2 | VARILLA, GUIA CADENA | 170-15013 |
| 3 | AJUSTA CADENA | 170-14116 |
| 4 | RUEDA, AJUSTA CADENA | 170-14121 |
| 5 | PIÑON | 170-14058 |
| 6 | RUEDA, VARILLA GUIA CADENA | 170-14124 |
| 7 | TORNILLO M5X12 | 170-14059 |
| 8 | ARANDELA | 170-38045 |
| 9 | PERNO, GUIA CADENA | 170-14127 |
| 10 | DISCO DENTADO | 170-15015 |
| 11 | TORNILLO PIVOT, AJUSTA CADENA | 170-14120 |
| 12 | VARILLA, AJUSTA CADENA | 170-80075 |
| 13 | VARILLA, AJUSTA CADENA | 170-14108 |
| 14 | RESORTE, AJUSTA CADENA | 170-38115 |
| 15 | ARANDELA | 170-38045 |
| 16 | TORNILLO, DRENAJE M12X1,5 | 170-11026 |